System Entity Structure Ontology Toolbox for MATLAB/Simulink: Used for Variant Modelling

Daniel Pascheka d.pascheka@stud.hs-wismar.de
Thorsten Pawletta thorsten.pawletta@hs-wismar.de

Hochschule Wismar, Research Group CEA

presented at: **MATHMOD 2015 - 8th Vienna International Conference on Mathematical Modelling**
Vienna University of Technology, Austria, February 18 - 20, 2015

IN SHORT

Current simulation environments support modular, hierarchical modelling and the combination of different modeling formalisms, and provide powerful numerical methods for simulation and data evaluation. What is not yet considered equivalently is the conceptual modeling phase and data modeling, as well as experiment descriptions of various system models and data sets or a combination with other numerical methods. Those missing parts are requirements that are becoming increasingly more important.

The ontology-assisted modeling intends a holistic approach that supports the process of modeling and simulation from the conceptual phase to goal-oriented experimentation with various system variants. Ontology-assisted characterizes a declarative specification of various system structures and parameter settings in combination with configurable basic models. Basic models map different dynamic system behavior, define an input and output interface and are organized in a model base (MB). The ontology specifies references to basic models and defines admissible parameter settings for them. Similarly, ontology can be used to specify a set of different experiments with the system models. In this case, the ontological specification describes the composition of experiments using references to various experiment methods or data.

As a base ontology for system and data modelling, Zeigler et al. developed the System Entity Structure (SES). Based on the SES ontology they derived the SES/MB framework. The framework combines an SES with an MB and proposes basic methods for deriving a concrete system model and for generating an executable simulation model. The SES ontology is based on a clear, limited set of description elements and axioms. Thus, it is easily usable for engineers. However, an important precondition for the application of new concepts in engineering is their availability in an engineering software environment and their direct combination with established methods. That is why a new and extended toolbox for MATLAB/Simulink has been developed, which is completely implemented and integrated in MATLAB and provides a graphical front-end for SES-based modeling. In addition, it provides different methods to derive system models from an SES and to generate executable simulation models for Simulink using predefined blocksets or subsystems. In the same way models for SimEvents or the MATLAB/DEVS Toolbox can be generated automatically with little effort.

THEORETICAL BACKGROUNDS

SES/MB Framework

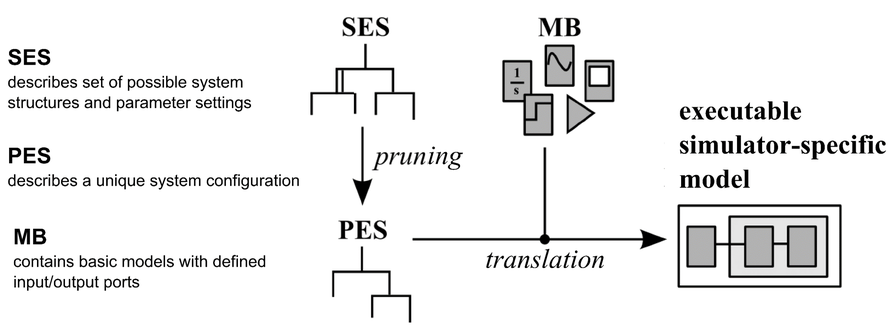

Originally SES Ontology and Modifications

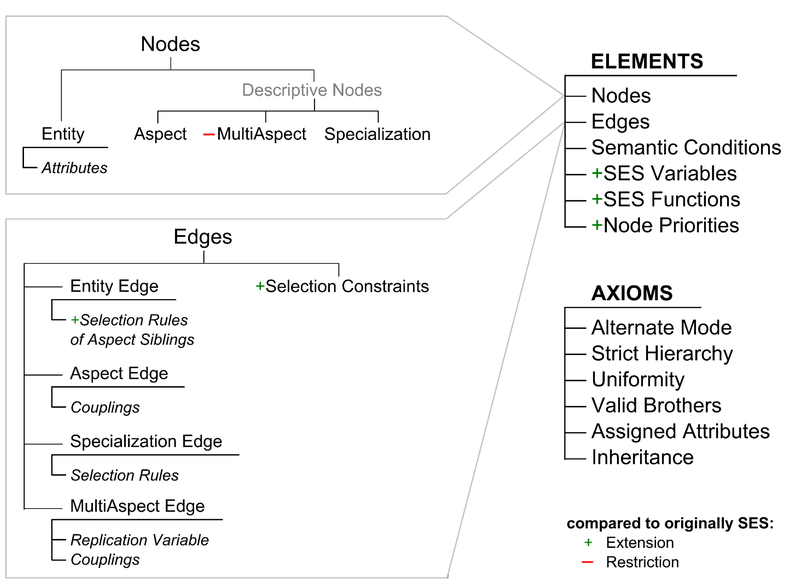

SES TOOLBOX FOR MATLAB/SIMULINK

Software Architecture

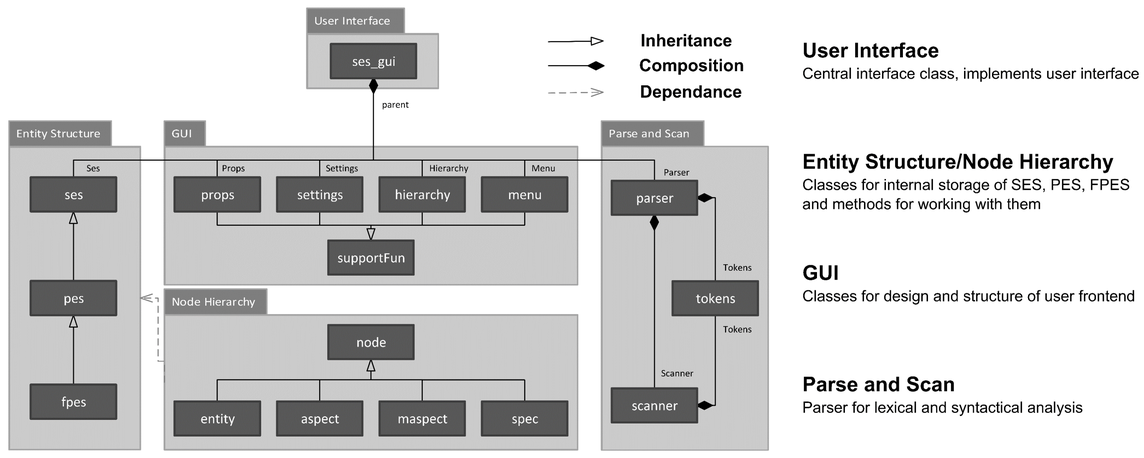

User Interface

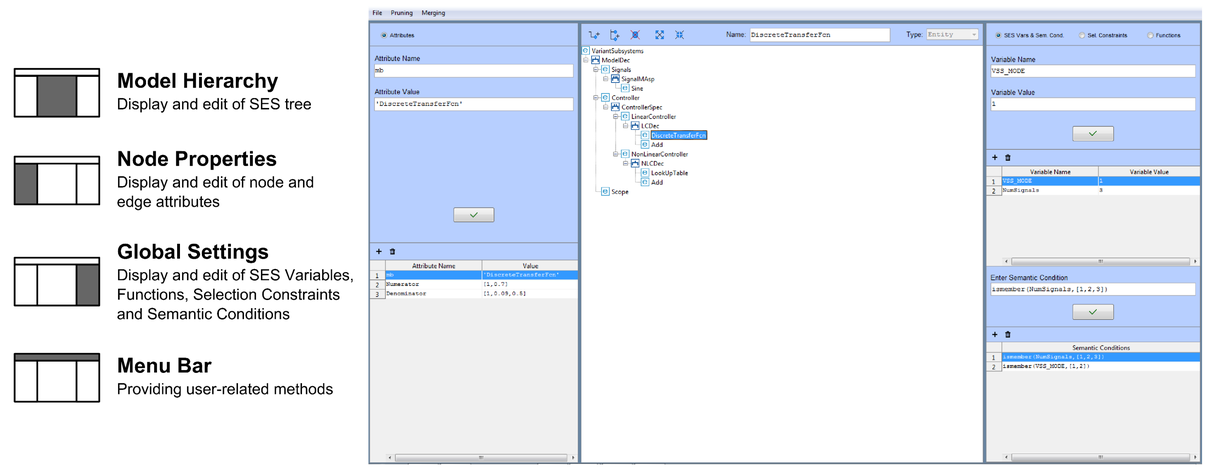

Methods: Merging, Pruning, Flattening

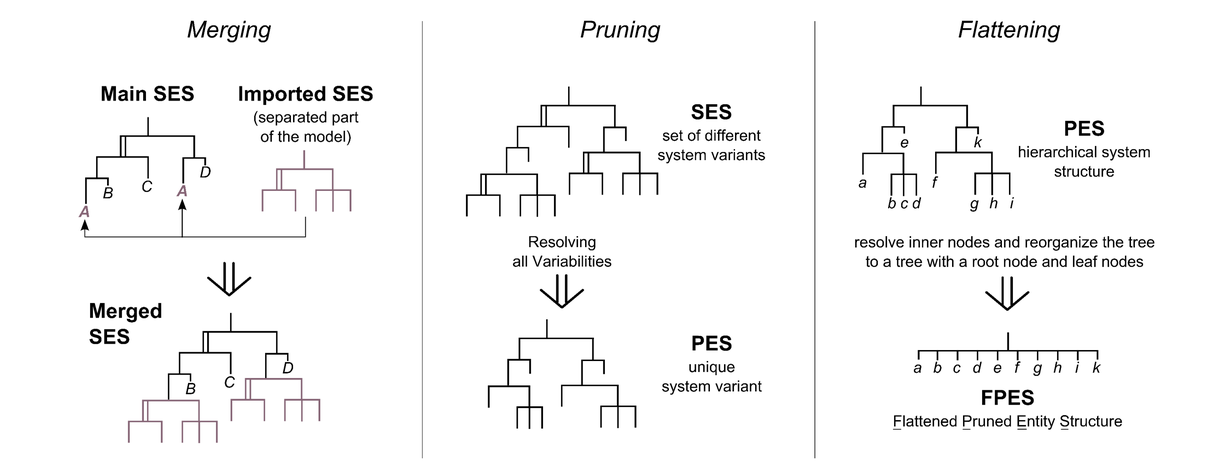

Problem-oriented Model Translation

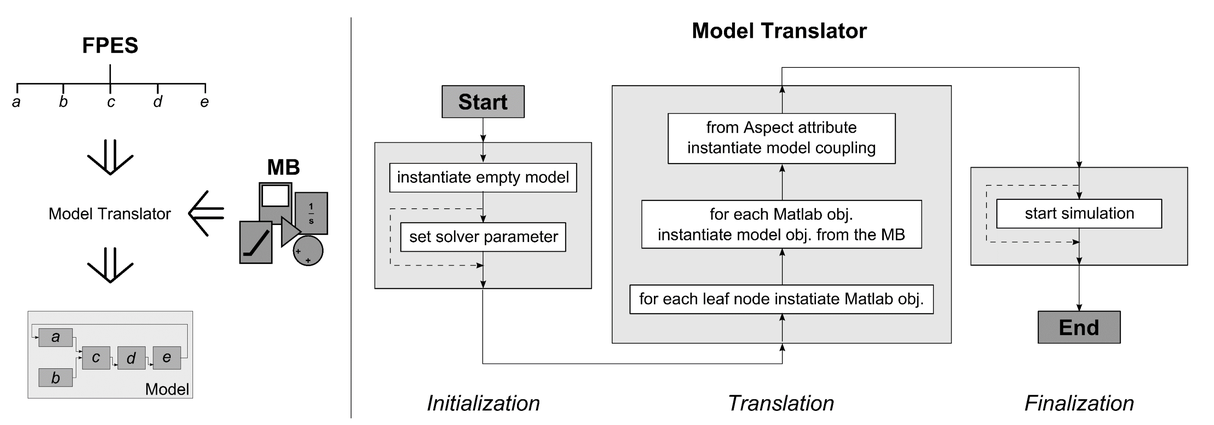

VARIANT MODELING: Variable Signal Input for a Set of Different Controller Models

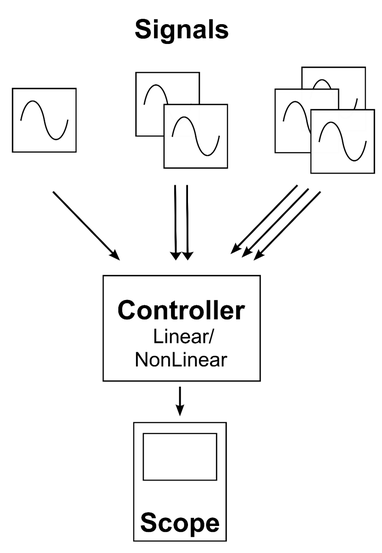

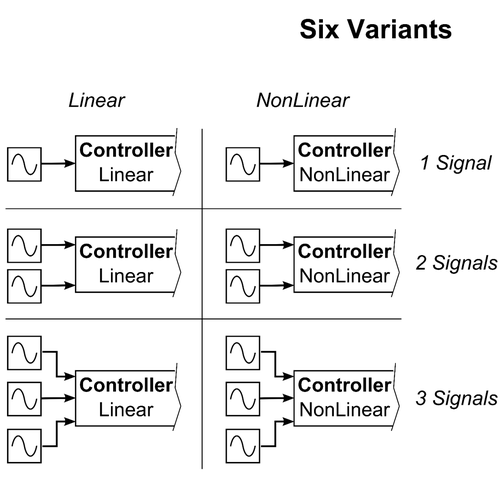

Problem:
different Couplings for each system variant

Solution:
dynamic Couplings specified using SES Functions